BROBY

SKYDEKONTRAVENTIL

SKANDA A/S

Den korteste vej gennem opgaveløsning til resultat

No.	Part	Material
1	Body	Cast steel GCS-25
2	Bonnet	Cast steel GSC-25
3	Stem	Stainless steel
4	Cross piece	Cast steel GSC-25
5	Seat ring	Stainless steel
6	Disc	Stainless steel
7	Plug	Stainless steel
8	Shaft	Stainless steel
9	Link	Steel, zinkplated
10	Bolt/Nut	Steel, zinkplated
11	Gland bolt	Steel, zinkplated
12	Gland	Nodular cast iron GGG40.3
13	Indicator	Steel
14	Pillar	Steel
15	Bridge	Cast steel GSC-25
16	Bushing	Bronze Rg5
17	Washer	Bronze Rg5
18	Nut	Steel
19	Handwheel	Nodular cast iron GGG40.3

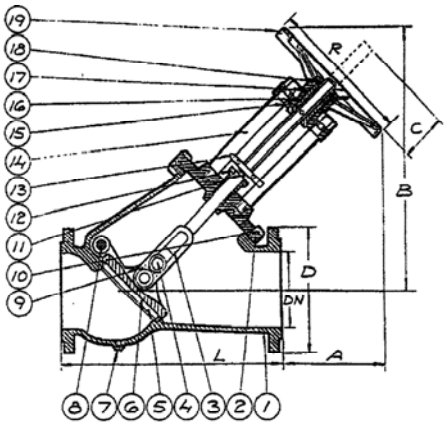

DN	D	n	Hcd	A	L	B	Max working-pressure Mpa 150 °C		Weight Kg
100	220	8	180	255	350	500	1,6		58,0
150	285	8	240	270	480	610	1,6		96,0
200	340	12	295	335	600	765	1,6		180,0
250	405	12	355	350	730	860	1,6		250,0
300	460	12	410	500	850	1100	1,0		510,0
350	520	16	470	600	980	1300	1,0		750,0

SKANDA A/S

Daniavej 35
9550 Mariager
Telefon: +45 9858 3033
Fax: +45 9858 3530
skanda@skanda.dk